DISIBEINT

CNV 110 / CNV 110 Ex

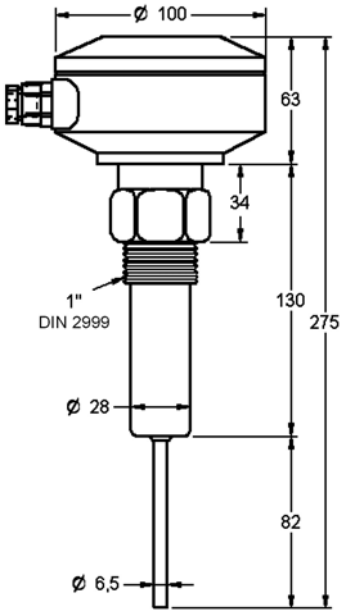

VIBRATING LEVEL SENSOR FOR SOLIDS IN GRAIN OR DUST

Function	Detection of the level in solids, in grain or fine with low degree of humidity. Usable in products of medium density (> 50 gl).
Operating principle	In the lowest part of the probe is placed a piezoelectric crystal that vibrates to a resonance frequency. When a product arrives at the height of the probe, the oscillation changes and the electronic circuit switches the output signal.
Process connection	Top screw 1", conical thread DIN 2999.
Electrical connection	By means of connection housing in injected aluminium, covered in RAL7001.
Output	SPDT Relay 5A / 250 VAC
Voltage / Consumption	20..250V AC/DC ±10% / 3VA
Level detection	Adjustable by means of one selector located in the connector (see Adjustment Mode).
Timing	· When detecting: 1 s · When no detecting: 2 to 5 s, depending on the product.
Indication leds	Supply voltage: Yellow Relay ON: Red
Temperature	· In the head: -20..+60ºC · In the probe: -20..+70ºC
Pressure	10 bar
Density	50 g/l
Maximum load	80 Nm (vertical or horizontal application)
Warning	It is not recommendable to use it with sticky or dusty materials or with those with tendency to deposit themselves on the probe.
Protection	Connector: IP 66 - Probe: IP 67
ATEX Version	Reference: CNV 110 Ex Certificate for Group II, Category 1/2 D (dust), Zones 20, 21 and 22.

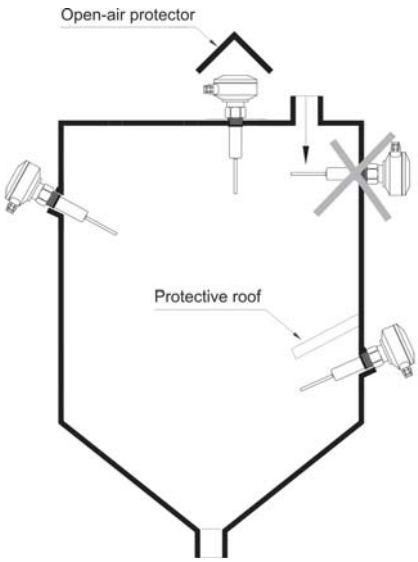

Installation	The CNV110 can be installed in the silo lateral or vertically. Do not thread rotating by the body, use a tool of 38mm. Normally thread to the sidewall of the silo to the height desired for detecting the product. It is recommended to place the probe with an inclination between 20º and 30º towards the exit of the silo to facilitate the material to flow more easily and do not deposit itself on the probe. When choosing the detection point, must be considered the angle of the filling slope and the draining cone so that the controllers can have time enough for the action on the transport mechanisms or signaling.
Protection in the installation	In a necessary case a protective cover must be used and it has to be located at 150 mm over the probe. This cover also must be used when minimum or intermediate levels in silos with a probable danger of formation of vaults or, when by the draining system and the nature of the product, a strong overload could exist on the probe. (See installation example, page 1).
Connection diagram	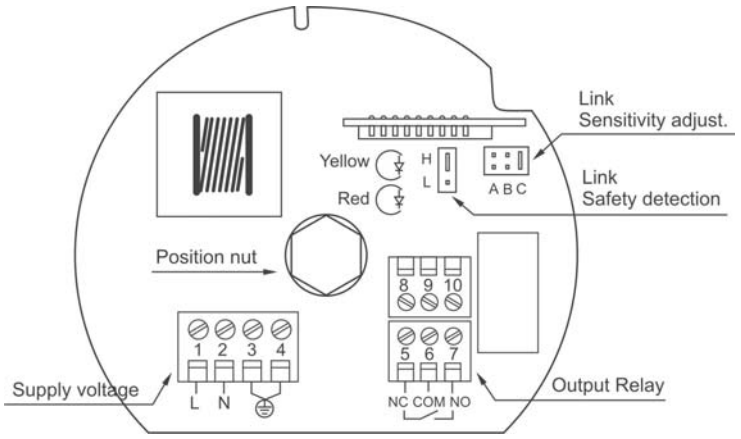 **Supply voltage:** 1 = L 20..250 VAC/DC 2 = N 3 - Ground **Output relay:** 5 = NO 6 = Common 7 = NC Tha maximum section of the wires is 1.5mm².
Operation mode	**Safety detection (link "HL")** High level: With the probe in the air, switch the link at position H, with which the relay is operated (red led lites ON). When the probe detects the product or there is failure in the supply voltage, the relay is released and the red led lites OFF. Low level: With the probe in the air, switch thelink at position L, with which the relay is released (red led lites off). When the probe is covered with product the relay operates (red led lites ON), and releases when the probe does not detect anymore or when there is failure in the supply voltage. **Sensitivity (link "ABC")** Position A: Light products, with low density, up to 50 g/l. Position B: Standar adjustment, enough for a large number of products. Position C: For heavy products with high density and able to remain on the vibrating rod. Light products cannot be detected with this adjustment. 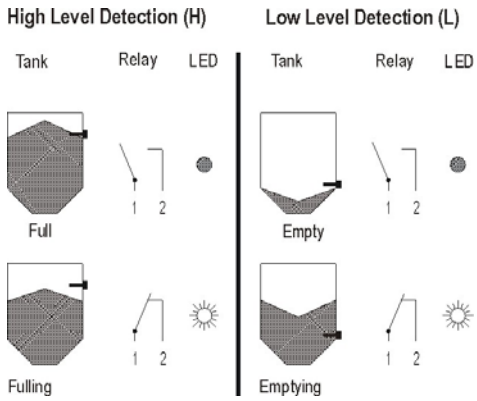
Safety indications	· Do not manipulate the sensor without disconnecting the supply voltage previously. · Before carrying out the electrical connection compares the data of the plate of characteristics that agree with the one of the connection. · If the supply voltage and the relay signal do not come from the same source, the cables of the supply voltage must be separated of the cables of the relay signal by means of cable locking devices, so that it is avoided that the cables of connection of the supply voltage can be in contact with the terminals of the relay and vice versa (what it could be possible in case of error, for example, breakage of a cable). · The power supply must be protected with a fuse (max. 4A). · Protect the contacts of the main switch of the inductive loads. · The ground connection must be carried out with complete safety.

DISIBEINT ELECTRONIC SL
Segle XX, 91
E08032-Barcelona
T: +34 934 330 370
F: +34 934 354 532
www.disibeint.com
disibeint@disibeint.com